SW900

Parapet Wall Anchor: 13.5”

FEATURES:

- Non-penetrating anchor with rubber padded design, eliminating parapet wall damage
- 2 tightening handles for even force distribution on the parapet wall
- High-strength steel construction with built-in D-ring
- Accommodates parapets and jersey walls 1.25″ to 13.5″
- Minimum Parapet Height Installation: 8.6″ (218.4 mm)

DIMENSIONS:

- 14” x 22” (355.6 mm x 558.8 mm)

MINIMUM BREAKING STRENGTH

- 5,000 lbs. (22 kN)

FALL ARREST POINT(S):

- 1 D-ring

ITEM WEIGHT:

- 20 lbs. (9.1 kg)

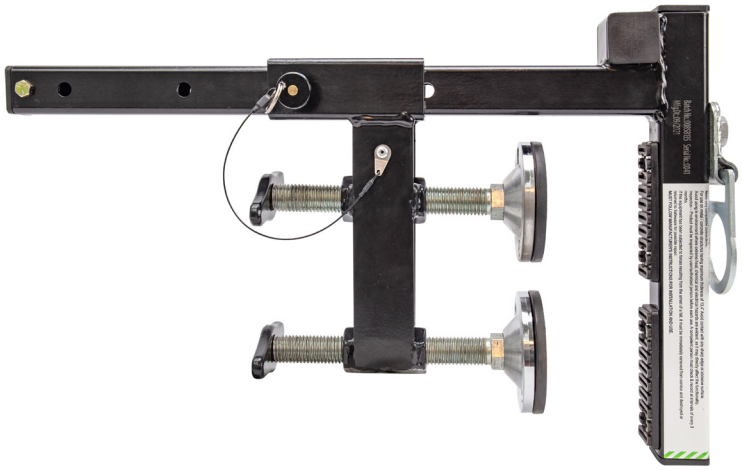

USER WEIGHT CAPACITY	
ANSI	130-310 lbs. (59-141 kg)
OSHA	Up to 420 lbs. (191 kg)

STANDARD COMPLIANT WITH	
ANSI	Z359.18-2017 Type A
OSHA	1926.502, 1910.66, 1910.140

SIZE(S)	
SW900-2	Parapet Wall Anchor: 21.5”

COMPONENT	MATERIAL SPECIFICATION
Main Body	Powder-coated steel
Screws	Zinc-plated steel
D-ring	Zinc-plated steel
Detent Pin	Stainless steel
Handle	Plastic
Cushions	Composite rubber

SW900-2

Parapet Wall Anchor: 21.5”

FEATURES:

- Non-penetrating anchor with rubber padded design, eliminating parapet wall damage
- 2 tightening handles for even force distribution on the parapet wall
- High-strength steel construction with built-in D-ring
- Accommodates parapets or jersey walls 1.25″ to 21.5″
- Minimum Parapet Height Installation: 8.6″ (218.4 mm)

DIMENSIONS:

- 14” x 30.6” (355 mm x 778.2 mm)

MINIMUM BREAKING STRENGTH:

- 5,000 lbs. (22 kN)

FALL ARREST POINT(S):

- 1 D-ring

ITEM WEIGHT:

- 23.8 lbs. (10.8 kg)

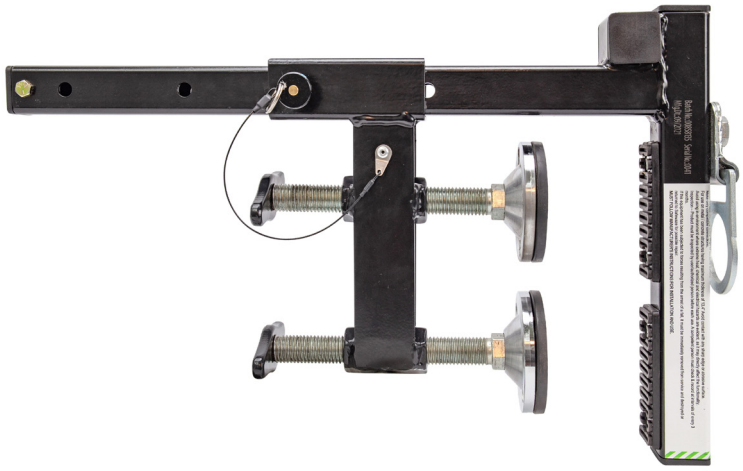

USER WEIGHT CAPACITY	
ANSI	130-310 lbs. (59-141 kg)
OSHA	Up to 420 lbs. (191 kg)

STANDARD COMPLIANT WITH	
ANSI	Z359.18-2017 Type A
OSHA	1926.502, 1910.66, 1910.140

SIZE(S)	
SW900	Parapet Wall Anchor: 14”

COMPONENT	MATERIAL SPECIFICATION
Main Body	Powder-coated steel
Screws	Zinc-plated steel
D-ring	Zinc-plated steel
Detent Pin	Stainless steel
Handle	Plastic
Cushions	Composite rubber